ALTERATIONS			
DATE	NOTED	APP'D	ALTERATIONS
3/6/19	[illegible]	[illegible]	COUPLING OMITTED BETWEEN HP & IP.

BILL OF MATERIAL				
QUANTITIES FOR ONE COMPLETE ENGINE.				
No. REQ.	MARK	NAME	MATERIAL	REMARKS
2	1	CRANK SHAFT	STEEL	O.H. TESTED
1	2	CRANK SHAFT	STEEL	O.H. TESTED
6	3	WEBS	STEEL	ON OR CAST.
3	4	PINS	STEEL	O.H. TESTED
18	5	COUPLING BOLTS	STEEL	O.H. & SPARE
18	6	NUTS	W.I.	
1	7	CRANK SHAFT	STEEL	O.H. TESTED
1	8	CRANK SHAFT	"	"

N.K. 40285

Engine Room

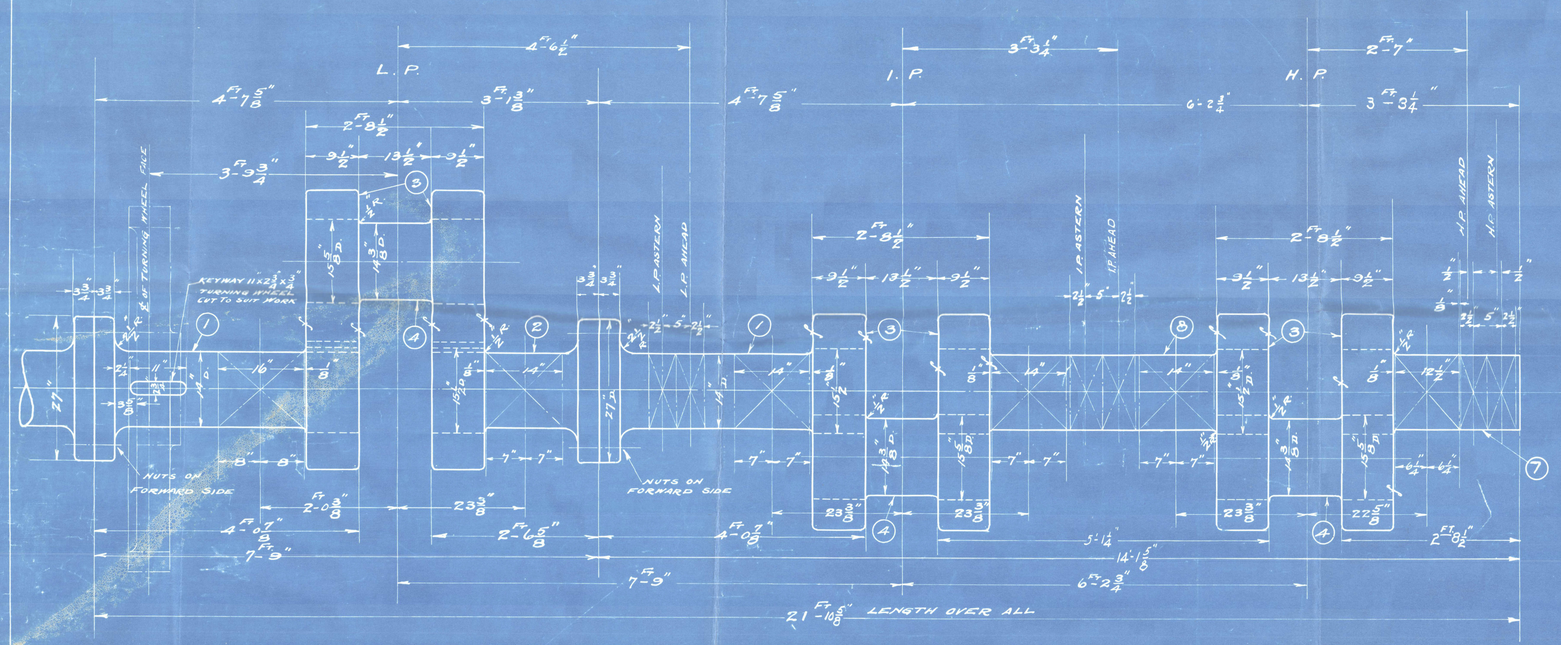

SLABS ROUGH MACHINED AND PAINTED IF FORGINGS.
SHAFTS AND PINS FINISHED ALL OVER.
BEARINGS PILLARED.
FINISHING CUT TO BE TAKEN OVER SHAFT AFTER ASSEMBLING.
CAST STEEL CRANK WEBS WILL BE ROUGH MACHINED ON SIDES & PAINTED.

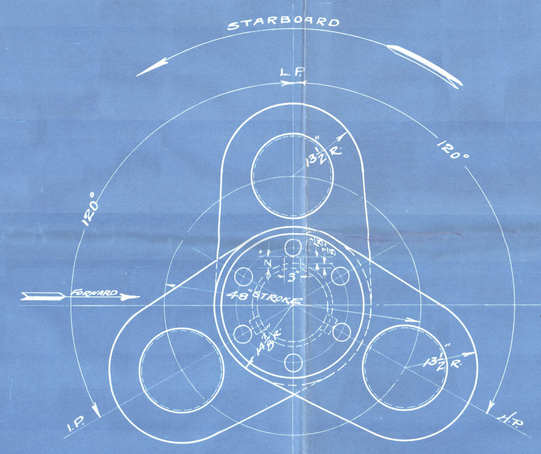

LOOKING AFT
RIGHT HAND ENGINE.

NOTE:—
ALL FORGINGS & CASTINGS WILL BE MADE TO SUIT RULES OF AMERICAN BUREAU OF SHIPPING.

STEEL CASTINGS SHOT BLAST FROM RUST AND BLOW HOLES.

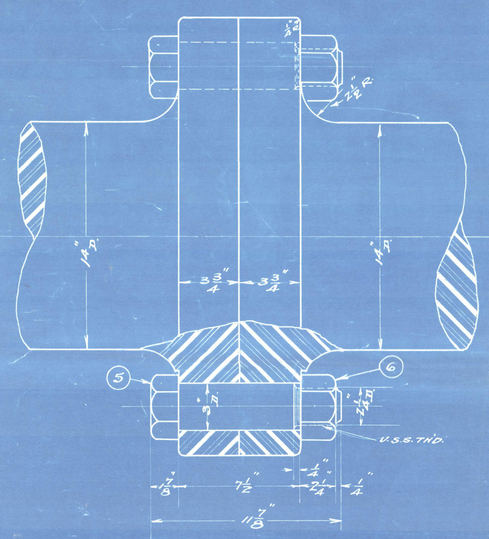

FINISH ALL OVER

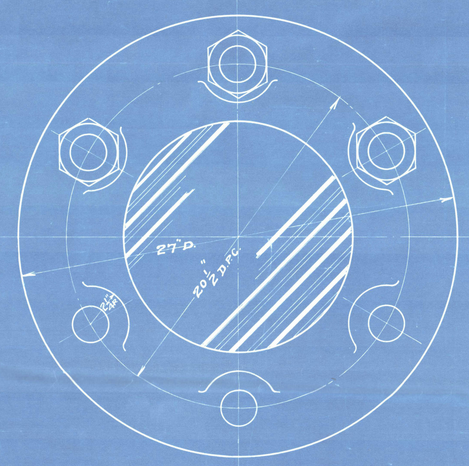

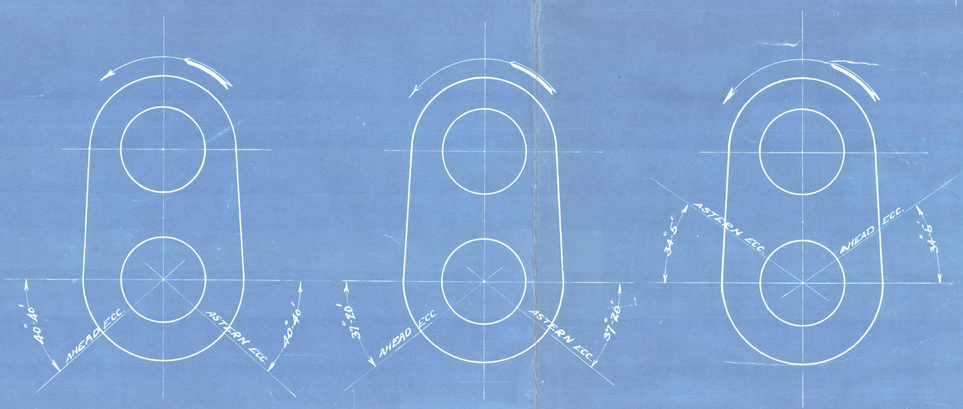

L.P. CRANK
OUTSIDE STEAM

I.P. CRANK
OUTSIDE STEAM

H.P. CRANK
INSIDE STEAM

CLASSIFICATION TESTS WILL BE MADE TO SUIT SOCIETY LISTED ABOVE.

FORGINGS TO MEET TESTS OF LLOYD'S REGISTER OF SHIPPING.
TENSILE STRENGTH.
28 TONS TO 32 TONS.
ELONGATION
24% FOR 28 TONS, 23% FOR 32 TONS.
SEE RULES OF ABOVE BUREAU.

STEEL CASTINGS TO MEET TESTS OF LLOYD'S REGISTER OF SHIPPING
TENSILE STRENGTH
26 TONS TO 35 TONS
ELONGATION
NOT LESS THAN 20%.
SEE RULES OF ABOVE BUREAU.

FORGINGS TO MEET TESTS OF AMERICAN BUREAU OF SHIPPING
TENSILE STRENGTH
60,000 TO 78,400 LBS.
ELONGATION.
30% FOR 60,000. 23% FOR 78,400
SEE RULES OF ABOVE BUREAU.

STEEL CASTINGS TO MEET TESTS OF AMERICAN BUREAU OF SHIPPING.
TENSILE STRENGTH.
58,000 TO 78,400 LBS.
ELONGATION
20% AT 58,000. 15% AT 78,400
SEE RULES OF ABOVE BUREAU.

IN CASE OF ERROR OR MISUNDERSTANDING NOTIFY THIS OFFICE IMMEDIATELY

UNITED STATES SHIPPING BOARD
EMERGENCY FLEET CORPORATION
TECHNICAL DEPARTMENT
WASHINGTON, D. C.

STD. ENGINE 24½" x 41½" x 72" STROKE
CRANK SHAFT

SCALE 1/2 = 1 FT. DATE JAN. 20 18
DRAWN BY [illegible] CHECKED BY [illegible]
TRACED BY [illegible] APPROVED BY [illegible]
Drawing No. E-2370-10

18-66

W30-0151

Grundsholt

W30-0151

© 2020
Lloyd's Register
Foundation